HVAC Essentials Package, Ford Transit Mid Roof 148", HVAC-FTMR148B

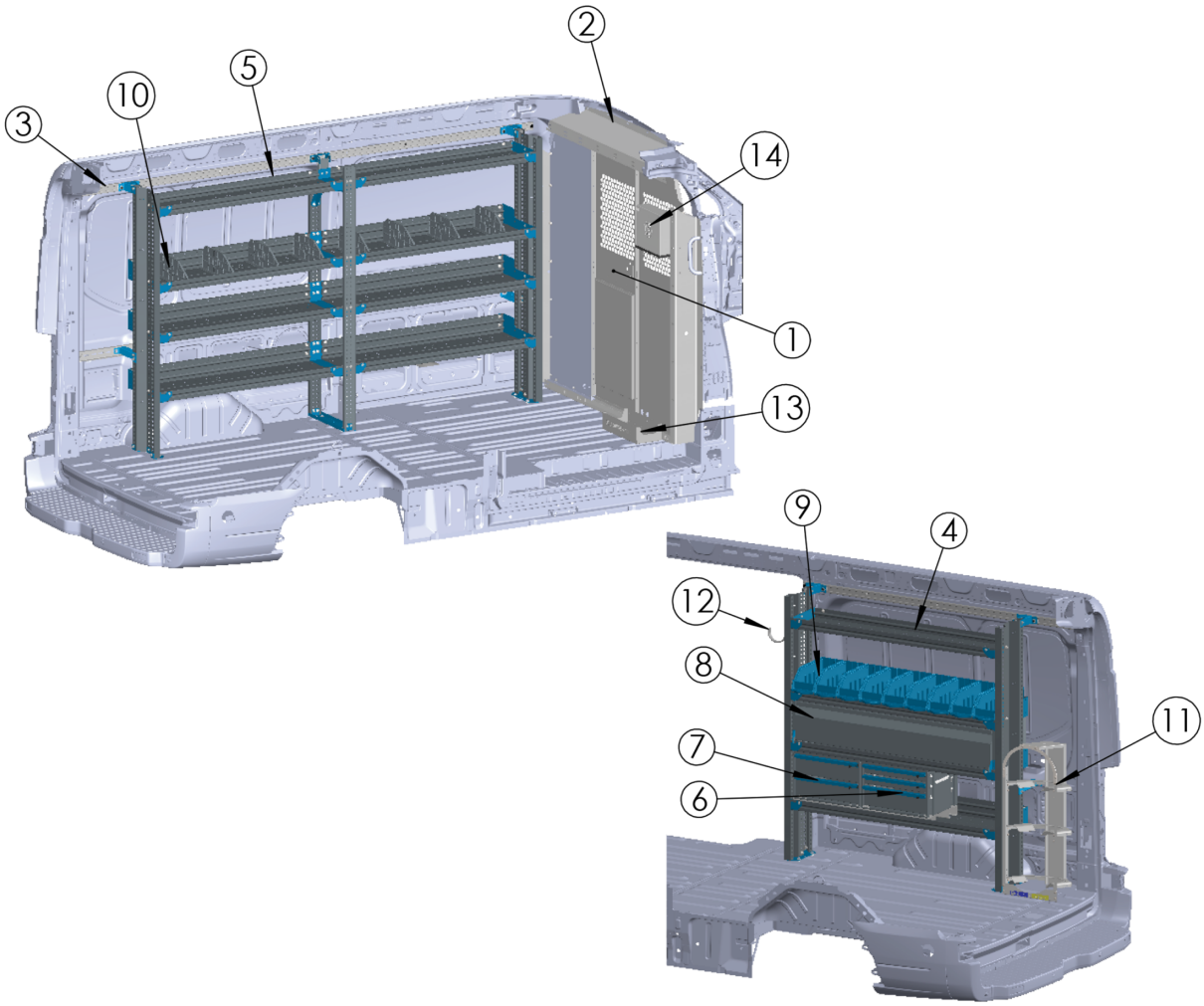

Parts list

Line Item	Description	Part Number	Quantity
1	Partition Panel Kit, (1) Solid Panel, (2) Visibility Panels	S1M2C2PM	x1
2	Steel Partition Mounting Kit	WKC1FDTM2	x1
3	Mounting Rail Kit, Driver & Passenger Side	ARKFTM148	x1
4	4-Shelf Unit, Tank Rack Use, 14x54	AS-2T1454FTMA	x1
5	4-Shelf Unit, Tank Rack Use,14x96 (R54/F48)	AS-2T1496FTMA	x1
6	3-Drawer Unit w/ Risers, 14 x 18	ADUK1418A3C-RI	x1
7	2-Drawer Unit w/ Risers, 14 x 18	ADUK1418A2T-RI	x1
8	Shelf Door Kit, 10 x 54	ADK1054A	x1
9	6" Portable Bin, 14"D x 6"W	BIN614	x1
10	14" Shelf Divider, 8-Pack	DIVK148	x1
11	3-Shelf Tank Rack, (2)30lb. (1)50lb.	230150TR	x1
12	5" Utility Hook	UH50	x1

Line Item	Description	Part Number	Quantity
13	Vacuum Pump Holder	VPH1	x1
14	HVAC Gauge Cover	GC1	x1