ITEM NO.	QTY.	PART NO.	DESCRIPTION
1	1	9590	PENDANT CONTROL(6093-A)
2	1	9592	PENDANT SUPPLY ASSEMBLY
3	1	9699	PENDANT CONTROL BOX
4	2	503	1/4-20x1/2" TS "F"
5	1	9581	1/2"I.D. GROMMET TO FIT 5/8" HOLE
6	1	9089	16-14 HEAT SHRINK BUTT CONNECTOR
7	1	9805	RUBBER GROMMET (ON UPRIGHT FOR WIRE)
8	1	9555	DANGER DECAL
9	1	9524	WARNING DECAL - CONTROL SHIELD
10	2	9077	WIRE TIES 7-1/2"
11	1	8055	12GA. X 2.88" X 3.75" COLE HERSEE BRKT
12	2	504	1/4-20x3/4" PH PAN HD MS
13	2	532	1/4-20 USS CROWN LOCK NUT
14	1	95225	CABLE/G2PENDANT CONTROL INSTRUCTIONS

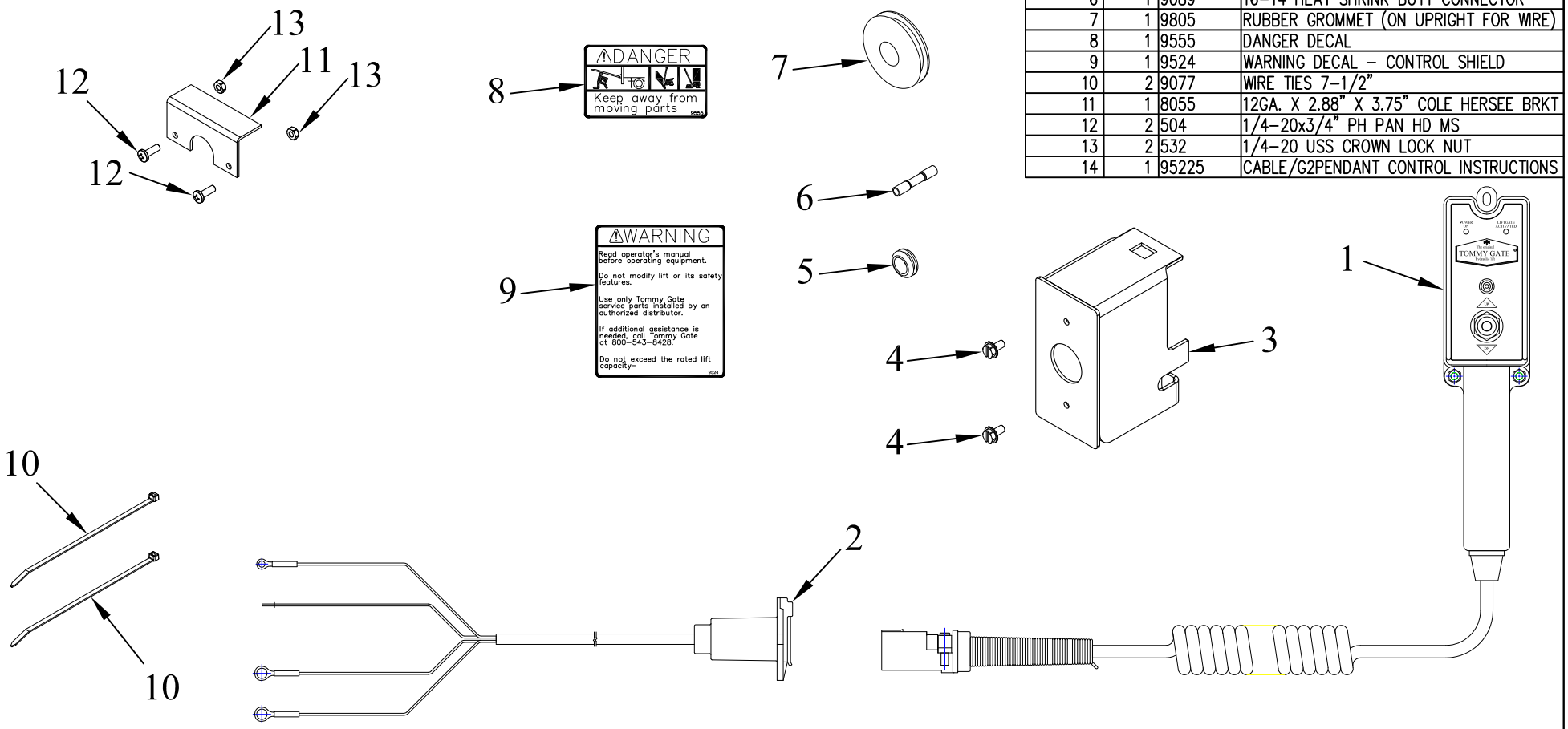

NOTE: TO ADD OR REPLACE A PENDANT CONTROL IN THE FIELD (G2 OR CABLE SERIES)

REV.	DATE	CHANGE RECORD	BY	APPVD	ECN
F	2/17/17	ADDED 95225	AAS		1798
E	5/10/16	ADDED 8055, 504, AND 532	GDB		1635
D	8/5/08	REVISED 9699	LSB	KGJ	
C	8/2/07	REVISED BOM	MTC	KGJ	

THIRD ANGLE PROJECTION

DECIMAL	2PLC	3PLC
MACHINE SAW,DRILL	.030	.015
SHEAR, PUNCH FORM	.060	.030
TORCH, WELDING ROUGH CAST	.090	.060
DRAFT 2°	ANGULAR ±1°	

FILENAME:

SYMBOLOGY PER ANSI Y14.5

DRAWN BY. DJR

DRAWN/DATE 10/06/05

APPVD/DATE

SALES CATEGORY

NOTES:

WOODBINE MFG. CO.
BUS BROWN DRIVE
WOODBINE, IOWA 51579

The original TOMMY GATE hydraulic lift

THE INFORMATION HERE IS CONFIDENTIAL AND MUST NOT BE USED IN ANYWAY DETRIMENTAL TO THE INTEREST OF WOODBINE MFG.

TITLE COMPLETE PENDANT KIT(CABLE & G2)

PRODUCT LINE | SCALE | FIN. WT. | PART NO. 9603